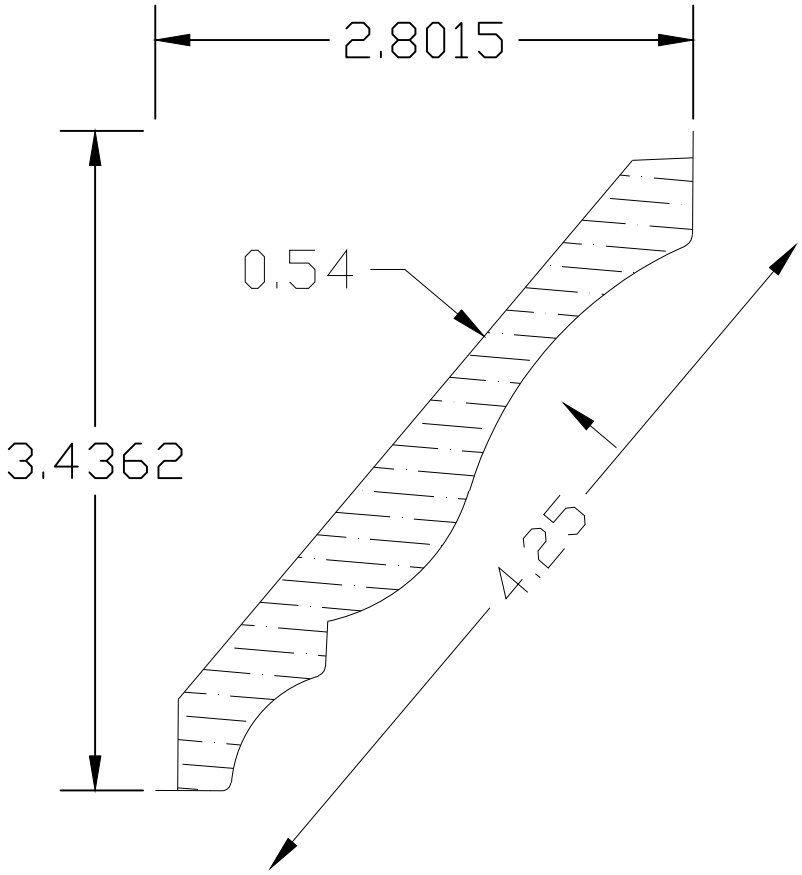

ROOT RIVER HARDWOODS
RR RR 3039
SCALE: 1'-0"=1'-0"