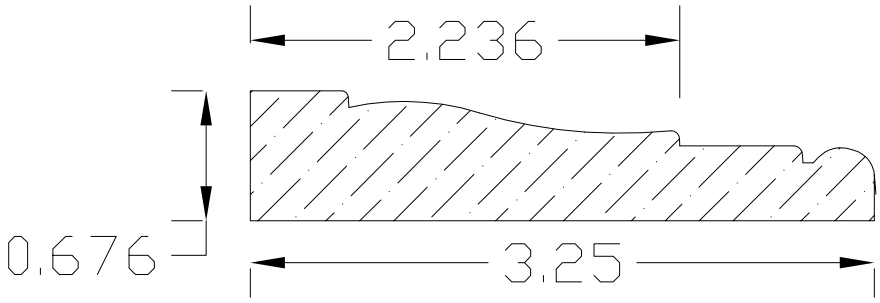

ROOT RIVER HARDWOODS
RR 1037
SCALE: 1'-0"=1'-0"